지시의 공칭치수	지시의 모서리부분
a= 0.7	지시되지 않은 모서리에서 C = 0.3~1.2 R = 0.3~1.2

지시되지 않은 치수								
면 부위 구분	다 듬	0.5 ~ 6	6 ~ 30	30 ~ 120	120 ~ 315	315 ~ 1000	1000 ~ 2000
	다듬질	±0.1	±0.2	±0.3	±0.5	±0.8	±1.2

표 면 거 칠 기								
Ra	✓	25/	12.5/	6.3/	3.2/	1.6/	0.8/	0.2/	0.1/
Rmax		100S	50S	25S	12.5S	6.3S	3.2S	0.8S	0.4S
다듬질	~	▽		▽▽		▽▽▽		▽▽▽▽	

NO.	DATE	REVISION & DESCRIPTION	SIGNATURE REVIEWED	SIGNATURE CHECKED
1				
2				

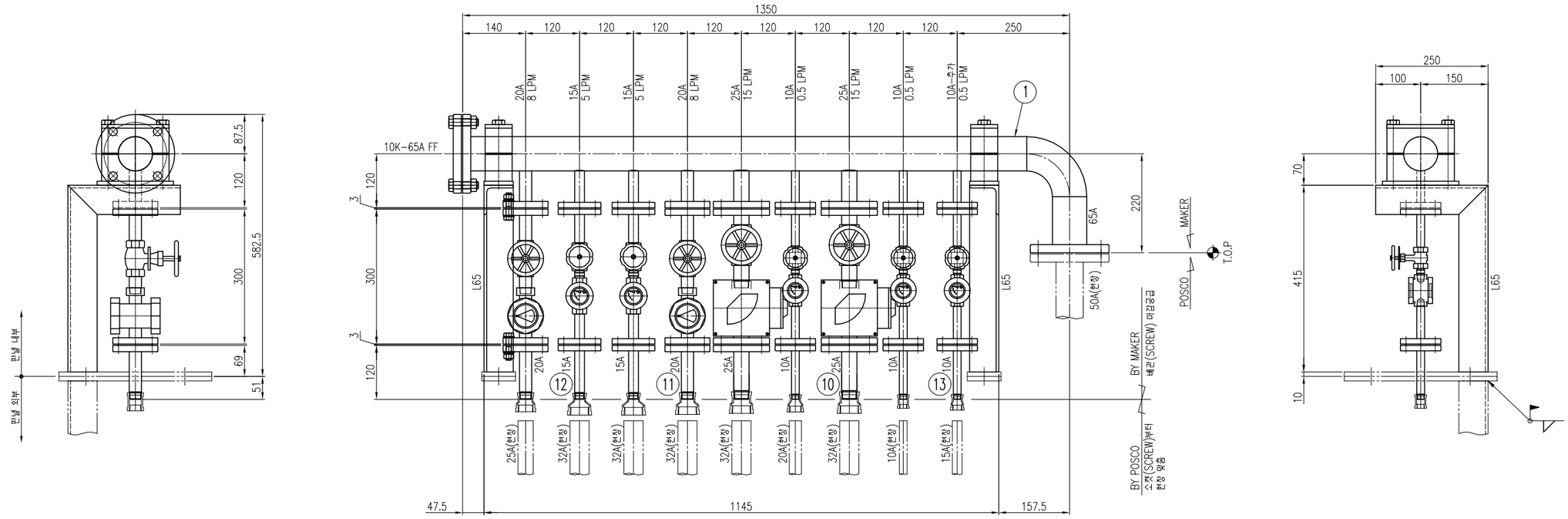

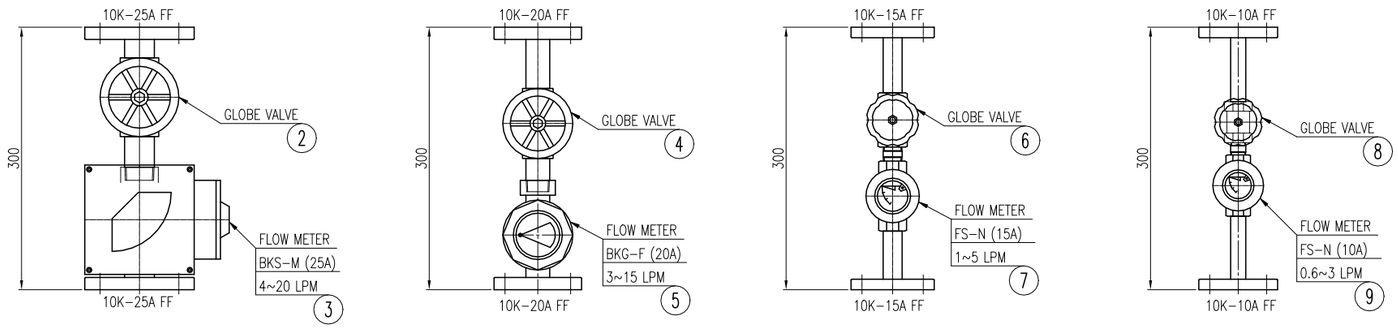

DETAIL OF 25A
(S=1.5:1)

DETAIL OF 20A
(S=1.5:1)

DETAIL OF 15A
(S=1.5:1)

DETAIL OF 10A
(S=1.5:1)

NOTES.
1. 기밀 시험 완료 후 시험성적서를 제출 할 것
2. 압력 시험은 설계압력의 1.5배로 실시 할 것

NO.	DESCRIPTION		MAT.(KS)	UNIT QUANTITY	TOTAL QUANTITY	PERUNIT WEIGHT(kg)	TOTAL WEIGHT(kg)	REMARK'S
14	CASING	W1300xH620xD400		SET	1			
13	PIPE SPOOL	10AxS40	STS304	EA	3			
12	PIPE SPOOL	15AxS40	STS304	EA	2			
11	PIPE SPOOL	20AxS40	STS304	EA	2			
10	PIPE SPOOL	25AxS40	STS304	EA	2			
9	FLOW METER	10A	PUR	EA	3			FS-N (10A)
8	GLOBE VALVE	10Kx10A	PUR	EA	3			
7	FLOW METER	15A	PUR	EA	2			FS-N (15A)
6	GLOBE VALVE	10Kx15A	PUR	EA	2			
5	FLOW METER	20A	PUR	EA	2			BKG-F (20A)
4	GLOBE VALVE	10Kx20A	PUR	EA	2			
3	FLOW METER	25A	PUR	EA	2			BKS-M (25A)
2	GLOBE VALVE	10Kx25A	PUR	EA	2			
1	HEADER	100Ax1350L	STS304	EA	1			
B	LUB SYSTEM FLOW METER & CASING			SET	1		100	(WORK SIDE)

SGHITEC

SCALE	1/5	PROJECTION	
SIZE	A1	DIMENSION	mm
EQUIPMENT			
SHEET No.			
DWG. NO.	01SG-20260212-3		

TITLE: 1열연 PLANT — VSB LUB SYSTEM FLOW METER & CASING
1RM FACILITY — MODEL : SG-200709-CSH

(CUSTOMER)	DRAWN	CHECKED	REVIEWED	APPROVED
SIGNATURE				
DATE				

(SUPPLIER)	DRAWN	CHECKED	REVIEWED	APPROVED
SIGNATURE	IM.S.W	JUNG.J.G	JUNG.J.G	JUNG.H.S
DATE	26.02.12	26.02.12	26.02.12	26.02.12

지시외 용접치수	지시외 모서리부분
a=0.7	지시되지 않은 모서리부 C = 0.3~1.2 R = 0.3~1.2

지시되지 않은 치수		0.5 ~ 6	6 ~ 30	30 ~ 120	120 ~ 315	315 ~ 1000	1000 ~ 2000
지시되지 않은 치수	다듬질	±0.1	±0.2	±0.3	±0.5	±0.8	±1.2

표면거칠기								
Ra	√	25/	12.5/	6.3/	3.2/	1.6/	0.8/	0.2/ 0.1/
Rmax		100S	50S	25S	12.5S	6.3S	3.2S	0.8S 0.4S
다듬질	~	▽		▽▽		▽▽▽		▽▽▽▽

NO.	DATE	REVISION & DESCRIPTION	SIGNATURE REVIEWED	SIGNATURE CHECKED
1				
2				

(14)

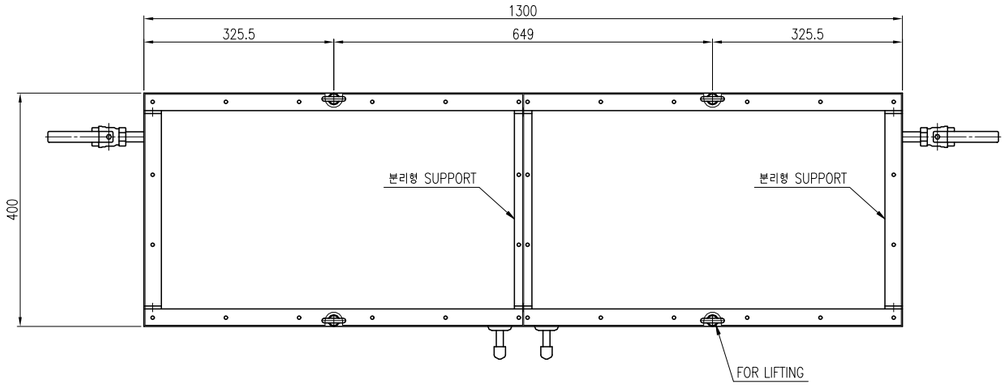

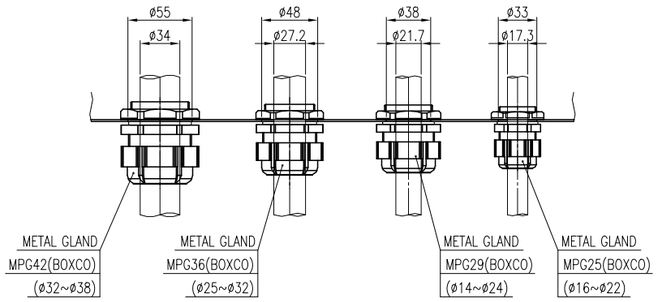

DETAIL OF PIPE FITTING
(S=2:1)

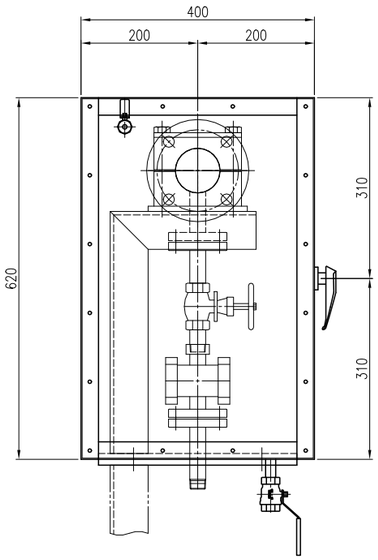

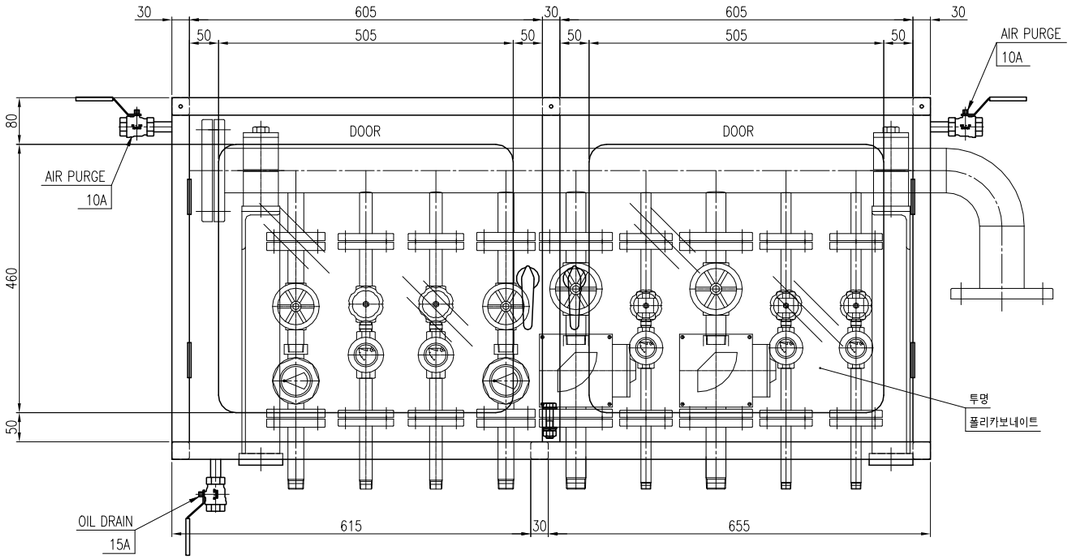

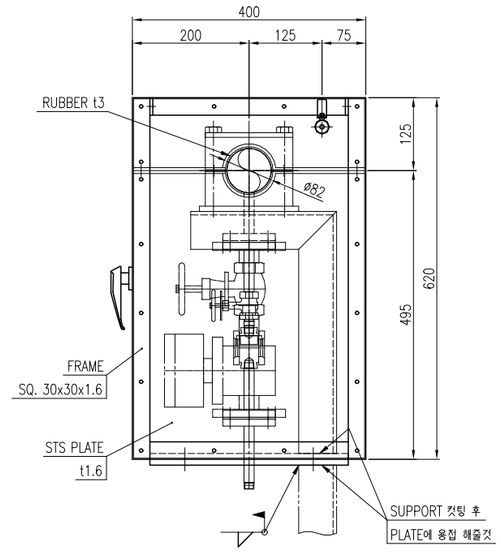

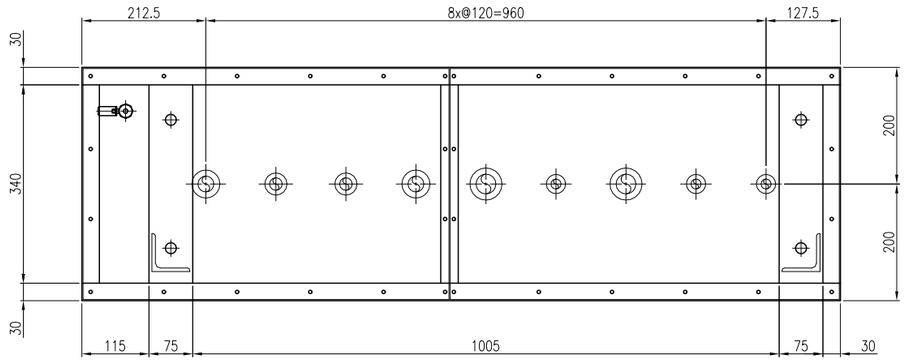

NO.	DESCRIPTION	MAT.(KS)	UNIT QUANTITY	TOTAL QUANTITY	PERUNIT WEIGHT(kg)	TOTAL WEIGHT(kg)	REMARK'S

SGHITEC

SCALE	1/5	PROJECTION			
SIZE	A1	DIMENSION	mm		
EQUIPMENT					
SHEET No.					
DWG. NO.	01SG-20260212-4				

TITLE			
1열연	PLANT	VSB LUB SYSTEM FLOW METER & CASING	
1RM	FACILITY	MODEL : SG-200709-CSH	

(CUSTOMER)	DRAWN	CHECKED	REVIEWED	APPROVED	(SUPPLIER)	DRAWN	CHECKED	REVIEWED	APPROVED
SIGNATURE						IM.S.W	JUNG.J.G	JUNG.J.G	JUNG.H.S
DATE						26.02.12	26.02.12	26.02.12	26.02.12